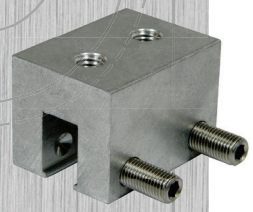

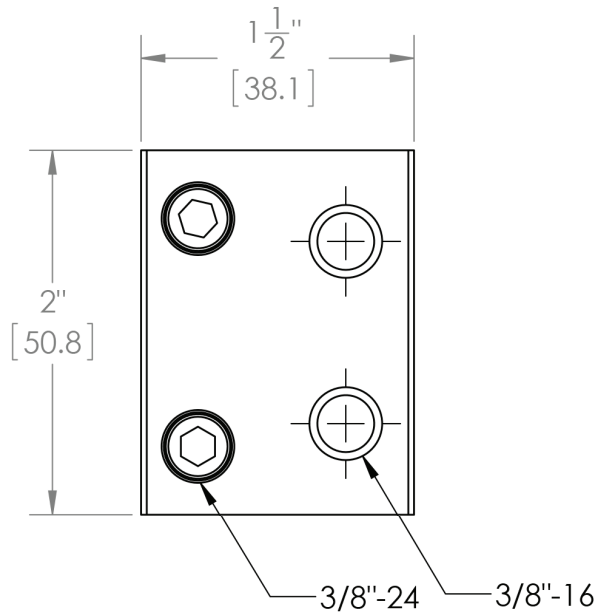

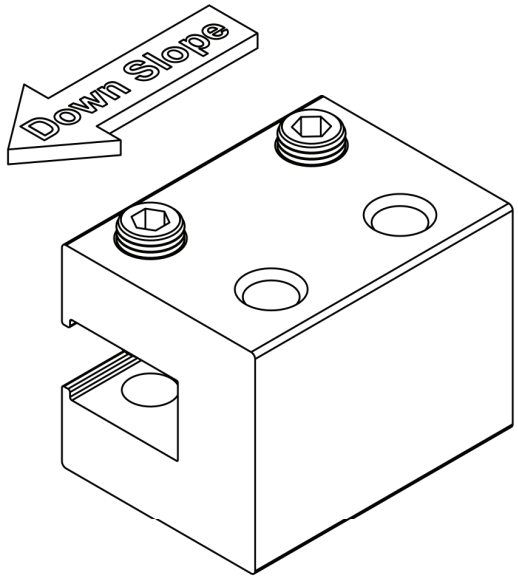

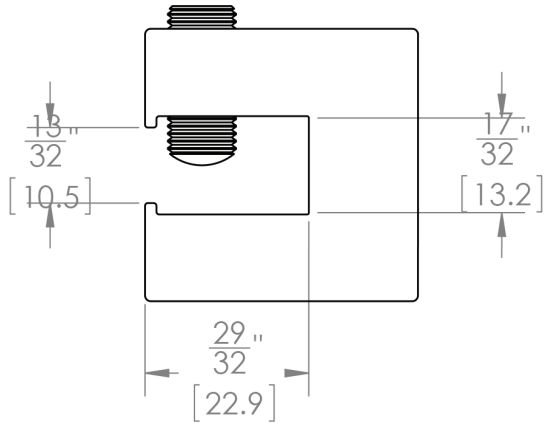

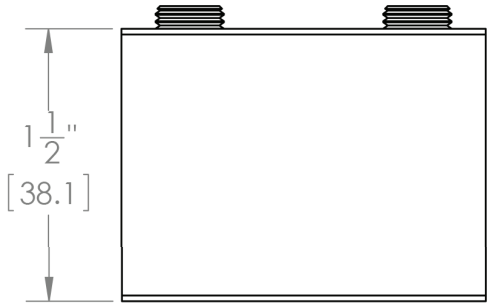

 © EcoFasten Solar® All content protected under copyright. All rights reserved. 08/12/13