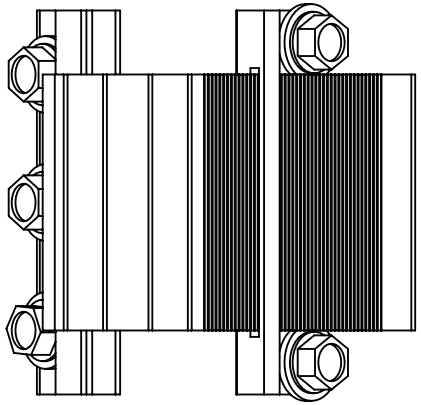

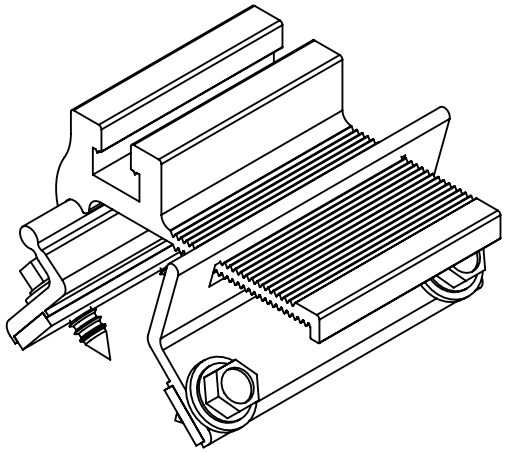

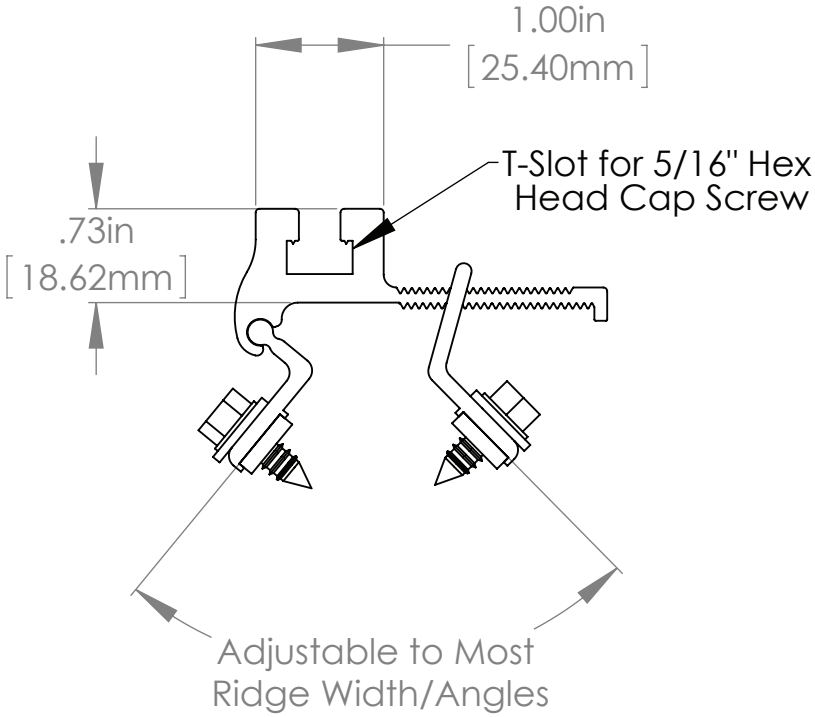


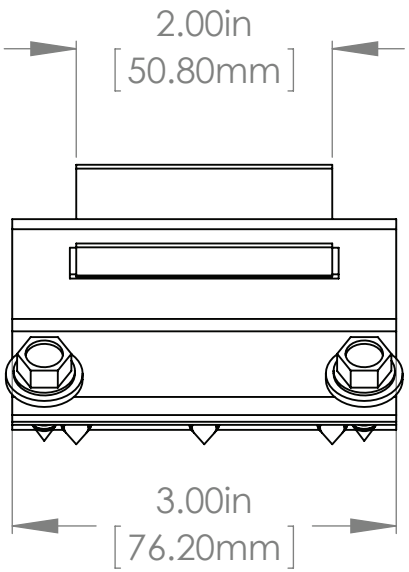


 EcoFasten Solar® All content protected under copyright. All rights reserved. 7/31/2014

EcoFasten Solar products are protected by the following U.S. Patents: 8,151,522 B2 8,153,700 B2 8,181,398 B2 8,166,713 B2 8,146,299 B2 8,209,914 B2 8,245,454 B2 8,272,174 B2 8,225,557 B2