EcoFasten™
An ESDEC Company

US Headquarters | 4141 W. Van Buren St., Ste. 2 | Phoenix, AZ 85009
US Branch | 976 Brady Ave., Ste. 100 | Atlanta, GA 30318

February 2nd, 2022

EcoFasten

4141 West Van Buren St.

Phoenix, AZ 85009

Attn.: John Hudson, Senior Director of Product, EcoFasten

Re: Ecofasten *RockIt Flashless Slide Assembly* Direct to Roof Deck Attachment with *RockIt Mount* Allowable Capacities

This letter certifies the structural capacity of the EcoFasten *RockIt Flashless Slide Assembly* for use as a roof attachment, in combination with a *RockIt Mount*, on RockIt solar systems. The *RockIt Flashless Slide Assembly* consists of an extruded aluminum slide, that contains 8 punched holes used for roof attachment via #12 wood screws. The *RockIt Mount* includes a pedestal which attaches to the slide and allows for horizontal system adjustment while a leveling bolt provides vertical adjustment of the PV module. The tested *RockIt Flashless Slide Assembly* with *RockIt Mount* is simplified as *RockIt Flashless Assembly* going forward in this letter, and the details and component dimensions are shown in the Engineering Drawing found in Appendix A.

The structural capacities of the *RockIt Flashless Assembly* were determined from mechanical load testing along four respective load directions including uplift, compression, lateral parallel to the rafter, and lateral perpendicular to the rafter. The capacity ratings are based on structural load tests performed using a Universal Instron Test Unit according to *ASTM D1761-20 "Standard Test Methods for Mechanical Fasteners in Wood and Wood Based Materials"*. For each load test, a *RockIt Flashless Assembly* was installed on a sample roof deck constructed from 2x4 rafters and an OSB roof deck sheathing with varying thickness, either 7/16", 15/32" or 19/32", as shown in Figure 1. Different nail schedules were applied for the different sheathing thicknesses. 8d Common nails were used with 6" edge and 12" field spacing for the 7/16" and 15/32" sheathing thicknesses. The 19/32" sheathing had nail spacings of 6" for edge and 6" for field, following guidelines from the *Florida Residential Building Code* Table R803.2.3.1. The moisture content and the specific gravity of the rafters were measured per *ASTM D2395-17 "Standard Test Methods for Density and Specific Gravity (Relative Gravity) of Wood and Wood-Based Materials"*. The recorded moisture content of the rafters among all sample roof decks is between 12% and 14% and the specific gravity was 0.42. The tested *RockIt Flashless Assembly* was affixed to the roof deck structure via 3" long #12 stainless steel wood screws per the requirements specified by the *EcoFasten RockIt Installation Guide*. Configurations which reflect the varied positions of the *RockIt Mount* along the slide, as well as positions of the leveling bolt for the vertical adjustment of the PV module, which is from ½" above and ½" below pre-assembly nominal position, were included in the testing. The worst-case failure associated with the lowest test result among the different configurations along the specified load direction tested is reported here and summarized in Table 1.

The failure observed under the uplift load was the wood screw withdrawal from the OSB deck for all tested roof sheathing thicknesses. For the wood screw withdrawal failure, a safety factor of 3 is applied to the uplift peak load, found from the average of eight (8) tests provided for each sheathing thickness. For a 7/16" thick OSB deck the peak failure load was 558 lbs., which provides an **allowable uplift capacity of 186 lbs**. For a 15/32" thick OSB deck the peak failure load was 647 lbs., which provides an **allowable uplift capacity of 216 lbs**. For a 19/32" thick OSB deck the peak failure load was 850 lbs., which provides an **allowable uplift capacity of 283 lbs**.

The compression load failure observed was the crushing of the OSB deck under the *RockIt Flashless Assembly* for all tested roof sheathing thicknesses. For the deck bearing failure, a safety factor of 2.54 is applied to the peak load achieved from the average of eight (8) tests provided for each sheathing thickness. For a 7/16" thick OSB deck the peak failure load was 590 lbs., which provides an **allowable compression capacity of 232 lbs**. For a 15/32" thick OSB deck the peak failure load

was 721 lbs., which provides an **allowable compression capacity of 284lbs**. For a 19/32" thick OSB deck the peak failure load was 813lbs., which provides an **allowable compression capacity of 320 lbs**.

For the lateral load tests, two load directions, parallel and perpendicular to the rafter, were investigated. Under each lateral load direction, the *RockIt Flashless Assembly* was tested in two load positions, with *RockIt Mount* placed ½" above or below the pre-assembled nominal position on the leveling bolt. Load tests in both lateral load directions were performed with the *RockIt Flashless Assembly* installed on the worst-case roof deck using the minimum sheathing thickness of 7/16". For the lateral load parallel to the rafter, the critical failure mode which results in the lowest allowable capacity was observed to be, flexural yielding of the mount leveling bolt. The average of the yielding loads from five (5) lateral load tests is 237 lbs. and with a safety factor of 1.67 for the stainless-steel bolt yielding, **the allowable capacity for a lateral load parallel to the rafter is 142 lbs.** The critical failure mode for the lateral load perpendicular to the rafter is observed to be the wood screw withdrawal. The average of the withdrawal loads from eight (8) tests is 247 lbs and with a safety factor of 3.0 for the wood screw fastener withdrawal, **the allowable capacity for a lateral load perpendicular to the rafter is 82 lbs.**

Please note the provided test investigation and its associated results described herein were based on the load tests performed on the *RockIt Flashless Assembly* as a stand-alone roof attachment. It is not the intention of this letter to rate or certify *RockIt* system level performance or structural components other than those specifically delineated in this letter. This evaluation excludes the structural adequacy of the chosen PV modules, or underlying roof supporting members. For those, it shall be the responsibility of the designated system designer or project engineer to verify the structural capacity and adequacy regarding the applied or resultant loads of the chosen array configuration.

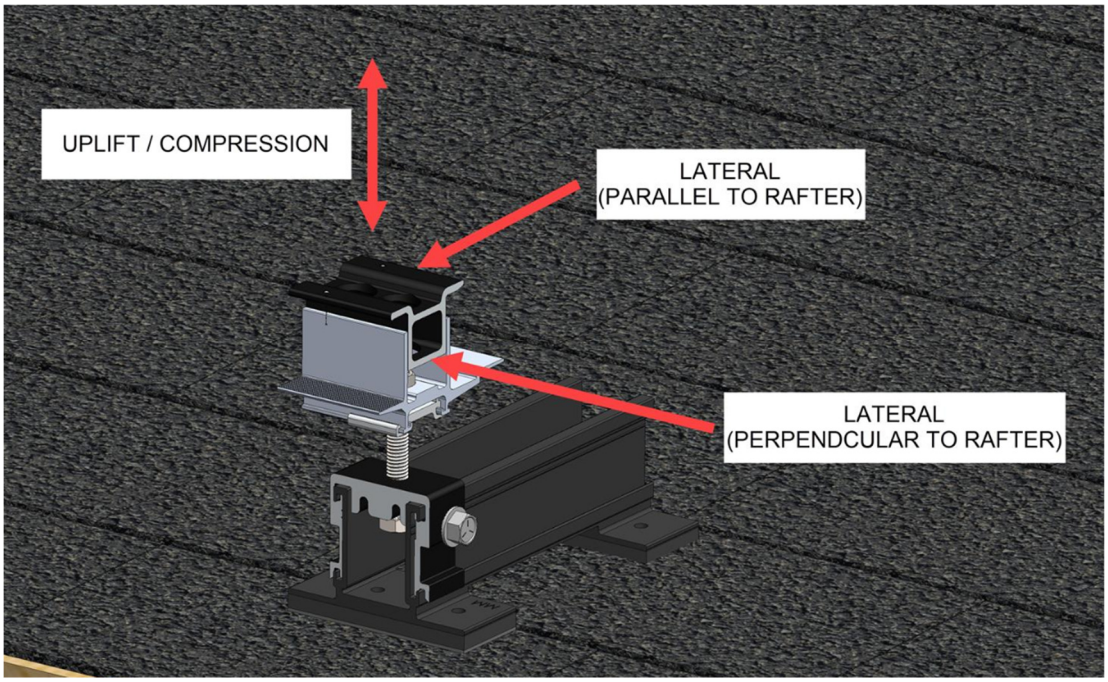

Figure 1: *EcoFasten* RockIt Flashless Assembly and Applied Loading Directions

US Headquarters | 4141 W. Van Buren St., Ste. 2 | Phoenix, AZ 85009
US Branch | 976 Brady Ave., Ste. 100 | Atlanta, GA 30318

Table 1: EcoFasten *RockIt Flashless Assembly* Direct to Deck Attachment Allowable Capacities (1)							
Load Direction	**Minimum Sheathing Thickness (in) (7)**	**Test Quantity**	**Critical Failure Mode**	**Safety Factor (5)**	**Avg Ultimate Capacity (lbs.)**	**Max deviation from mean (4)**	**Allowable Capacity (lbs) (6)**
Uplift (2)	7/16	8	Fastener Withdrawal	3.0	558	16.1%	186
	15/32	8	Fastener Withdrawal	3.0	647	17.6%	216
	19/32	8	Fastener Withdrawal	3.0	850	16.1%	283
Compression (3)	7/16	8	OSB Bearing	2.54	590	17.4%	232
	15/32	8	OSB Bearing	2.54	721	12.7%	284
	19/32	8	OSB Bearing	2.54	813	22.1%	320
Lateral Parallel to Rafter	7/16 Minimum	5	Stainless Bolt Yielding	1.67	237(8)	4.5%	142
Lateral Perpendicular to Rafter	7/16 Minimum	8	Fastener Withdrawal	3.0	247(8)	10.4%	82

Table 1 Notes:

(1) Capacities apply to a minimum deck thicknesses of 7/16", 15/32", and 19/32" on rafters spaced at 24" using 3" long #12 wood screws installed per the EcoFasten *RockIt Flashless Installation Guide*. Rafters and roof deck should be in sound structural conditions with no sign of rot, decay, previous installation, or pre-existing damages.
(2) The uplift direction is upward perpendicular to the roof surface.
(3) The compression direction is downward perpendicular to the roof surface.
(4) Deviation reflects the variance of the highest or the lowest test value from the group mean for the respective load direction. For load directions where deviation was larger than 10% after 5 tests, 3 additional tests are added per *ADM-2015* Appendix 1.
(5) Safety Factor is associated with the respective failure mode recorded and determined per *NDS 2018, ADM-2015, AISC 360-16* and *ASTM 7147-21*.
(6) Allowable capacity is equal to Average Peak Load at Failure divided by its associated Safety Factor.
(7) Sheathing Thickness applicable for either OSB or Plywood deck construction.
(8) Lateral Loads apply to all tested sheathing thicknesses.

EcoFasten™
An ESDEC Company

US Headquarters | 4141 W. Van Buren St., Ste. 2 | Phoenix, AZ 85009
US Branch | 976 Brady Ave., Ste. 100 | Atlanta, GA 30318

Sincerely,

REGISTERED PROFESSIONAL ENGINEER
GANG XUAN
NO. 6504
STRUCTURAL
STATE OF CALIFORNIA

2022.02.02
17:11:40 -08'00'

Gang Xuan, SE

Senior Structural Engineer

Matthew S Kuzila, PE

Structural Engineer

APPENDIX A: ENGINEERING DRAWING

ITEM NO.	PART NUMBER	REV	DESCRIPTION	QTY.
1	70-00041	X04	ROCKIT FLASHLESS SLIDE ASSEMLBY	1
2	70-00053	X02	SELF TAPPING SCREW #12 WITH A SEALING WASHER ASSEMBLY	8
3	750025	04	ROCK-IT 3.0 MOUNT ASSEMBLY	1

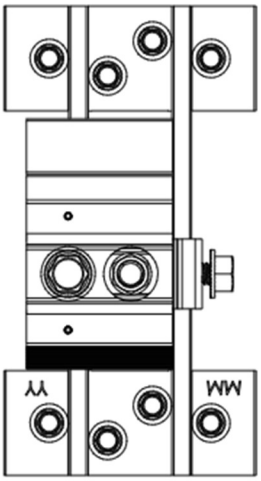

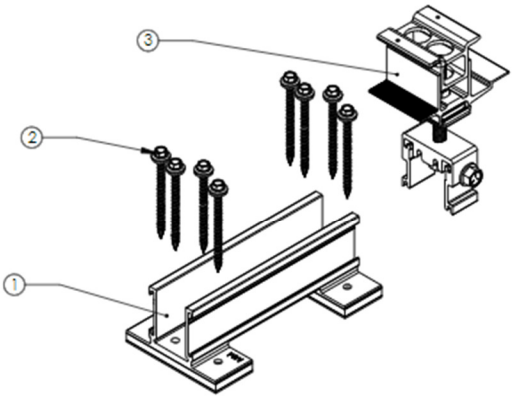

THIRD ANGLE PROJECTION

DO NOT SCALE DRAWING

PROPRIETARY AND CONFIDENTIAL

THE INFORMATION CONTAINED IN THIS DRAWING IS THE SOLE PROPERTY OF ESDEC INC. ANY REPRODUCTION IN PART OR AS A WHOLE WITHOUT THE WRITTEN PERMISSION OF ESDEC INC. IS PROHIBITED. COPYRIGHT © 2020 ESDEC INC.

DRAWN	RAD	09/02/2021
ENG APPR.	YS	09/14/2021

INTERPRET DIM AND TOLERANCE PER ASME Y14.5[M]-2009

DIMENSIONS TOLERANCES ARE IN:

INCHES	[MILLIMETERS]
.XX: +/- .050	.X: +/- 1.3
.XXX: +/- .050	.XX: +/- 1.3
ANGLES: +/- 5°	

ESDEC
INNOVATIVE MOUNTING SYSTEMS

ROCKIT FLASHLESS DTD TEST ASSEMBLY

SIZE A | DWG. NO. | REV.

SCALE:1:2 | SHEET 1 OF 2